DM24

QUICK-SEARCH
YG-1 PRODUCTS!!
www.yg1.solutions

DIE & MOLD MACHINING

TOOL SOLUTIONS FOR INDUSTRIES



DIE & MOLD INDUSTRY

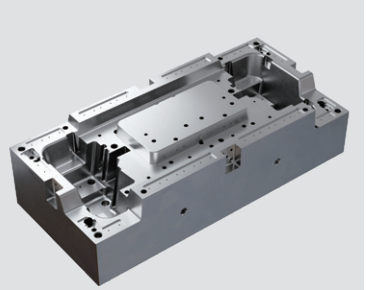
STEEL & PRE-HARDENED STEEL

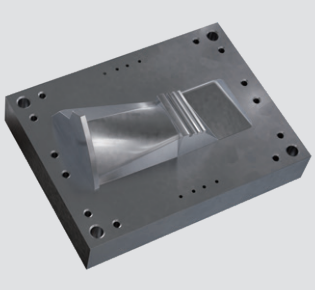
HIGH HARDENED STEEL

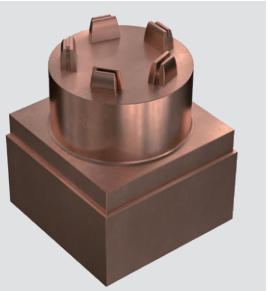
COPPER

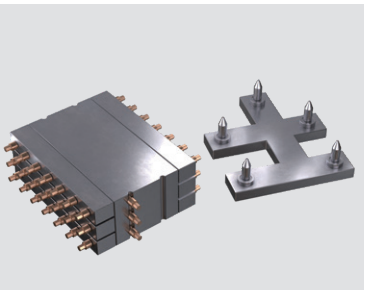
STAINLESS STEEL

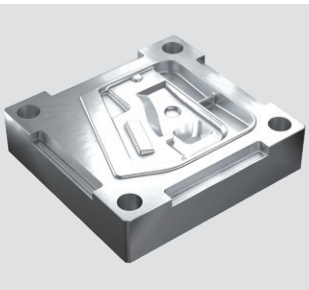
ALUMINUM

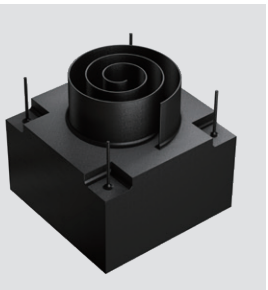
GRAPHITE

Currently, Die & Mold activities are fully part of the mass production industry, to support the demand of sectors such as automotive, aerospace, electronic, packaging, and more.
The newest available technology, such as sophisticated CAM software and new generation machine tools, always faster and with better performance, for Die & Mold customers, is the ideal and necessary tools to achieve targets such as high quality niche products, longer life of the molds and even faster machining with greater profitability.
For the Die & Mold industry, there is a need to be able to count on a cutting tools company with reliable tools to deal with the processing of free form shapes.

YG-1, as a global leader in the manufacture and application of cutting tools, brings you these innovations worldwide in the form of superior tooling, expert support, and world class delivery.

· Phone : +82-32-526-0909, www.yg1.solutions, E-mail : yg1@yg1.solutions

CONTENTS

INTRODUCTION	**04**
APPLICATIONS - STEEL & PRE-HARDENED STEEL	**06**
APPLICATIONS - HIGH HARDENED STEEL	**08**
APPLICATIONS - STAINLESS STEEL	**10**
APPLICATIONS - COPPER	**12**
APPLICATIONS - GRAPHITE	**12**
APPLICATIONS - ALUMINUM	**13**
TECHNICAL SUPPORT	**14**

· Phone : +82-32-526-0909, www.yg1.solutions, E-mail : yg1@yg1.solutions

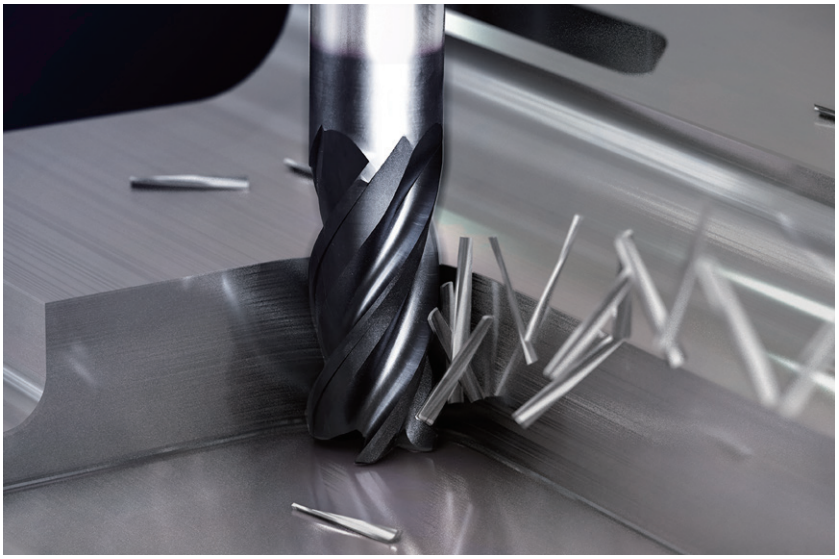

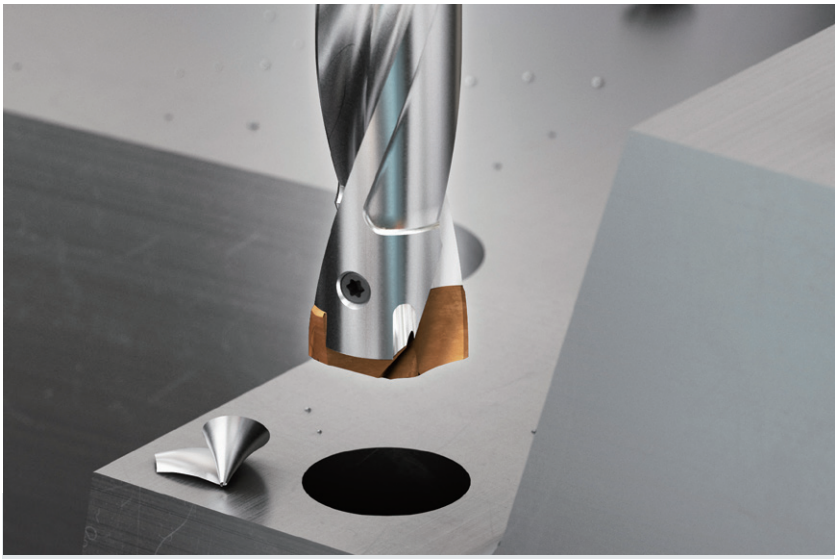



DIE & MOLD MACHINING

When speaking of molds, there are different types in the world. For example: molds for plastic materials, sheet metal-cutting and forming, die-casting, rubber molding, blow molds, and forging molds. Within the mold industries, there are also several defined spare parts that complete the mold structure. This great variety implies the machining process on a wide range of materials, such as pre-hardened steels, hardened steels, cast iron, aluminum for prototypal molds, stainless steels for manifold and hot runner parts, graphite and copper for electro-erosion processes. The abundant tools YG-1 offers are able to support the needs of the Die & Mold customers, whatever the material to be processed and the application to be implemented.



· Phone : +82-32-526-0909, www.yg1.solutions, E-mail : yg1@yg1.solutions



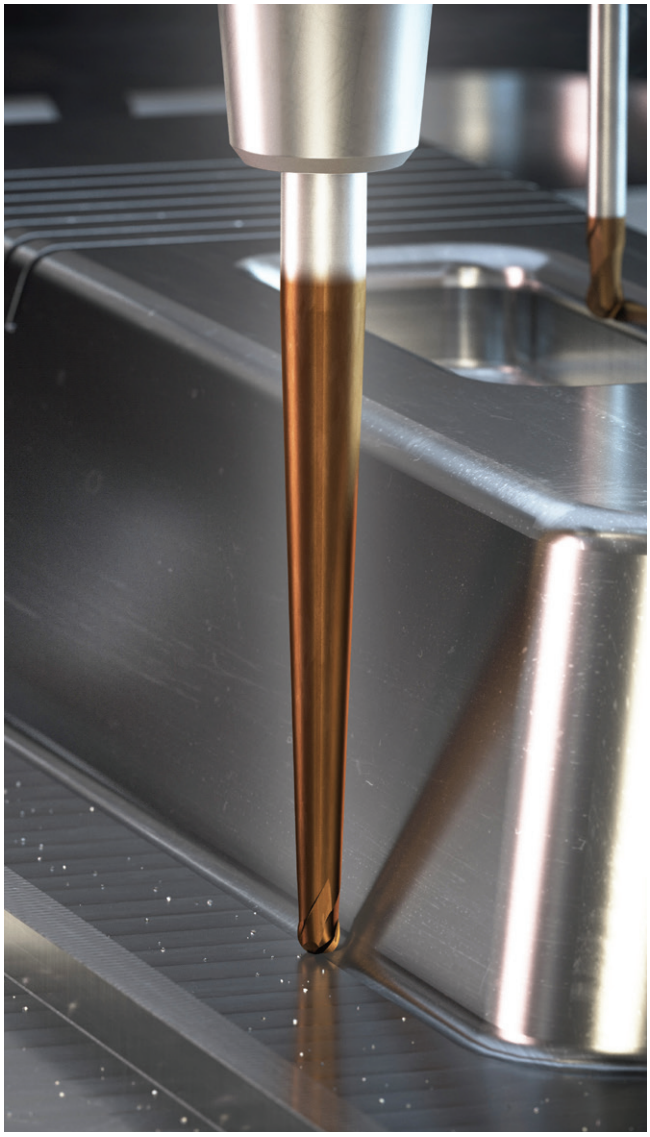

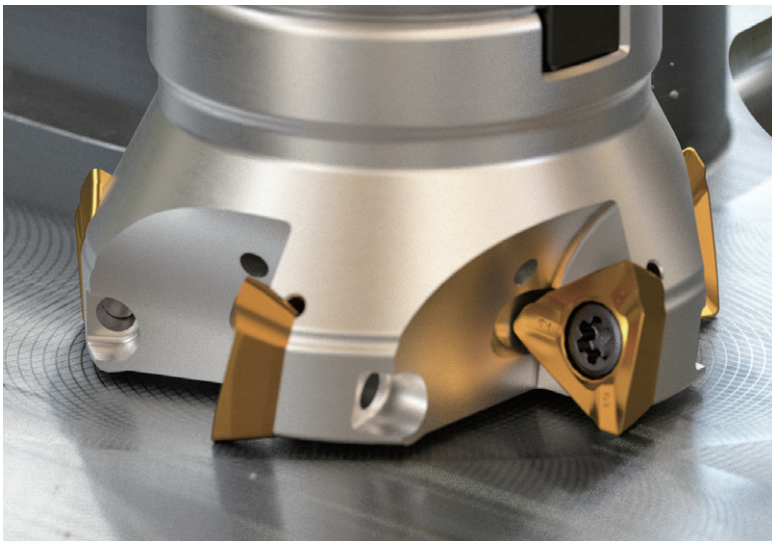

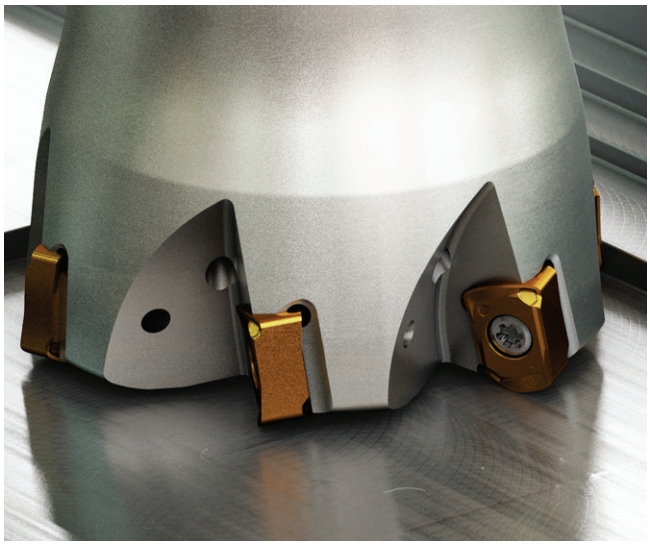

· Phone : +82-32-526-0909, www.yg1.solutions, E-mail : yg1@yg1.solutions

STEEL & PRE-HARDENED STEEL

The Die & Mold industry makes use of different types of steels, according to the type of mold to be made.
Normally they are divided into 2 families:
- Hot work steels (molds for plastic injection, rubber, forging, die-casting)
- Cold work steels (dies for shearing and plate deformation)

In the latter type of molds, the use of cast iron is also frequent.
Die & Mold industry needs a right partner to machine a wide range of different pre-hardened materials.
YG-1 can cover that demand, whatever the material, application or machine.

MILLING / FINISHING / PROFILING / ROUGHING

4G MILL

Solid Carbide End Mill line, for high precision finishing.
2, 4 and 6 flutes, long length, square corner and corner radius available.



MILLING / HEAVY CUTTING / SEMI FINISHING / PROFILING

V7 PLUS

Solid Carbide End Mill line for a wide range of materials.
Available in 4 and 6 flutes, with chamfer, ball nose, and corner radius.
The 6 flute, available with Chip Splitters, is suitable for fine finishing and trochoidal milling as well.



COPY MILLING / PROFILING

i-Xmill

The versatile i-Xmill line, its' Corner Radius and Ball Type exhangeable inserts were developed with the Die & Mold industry in mind. Despite the long shank, the tool is virtually vibration free, and thus provides excellent results in deep pockets - one of the most common applications in machining Die & Mold sets.

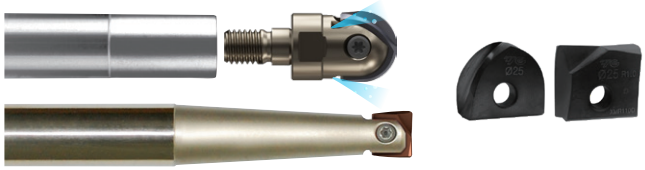

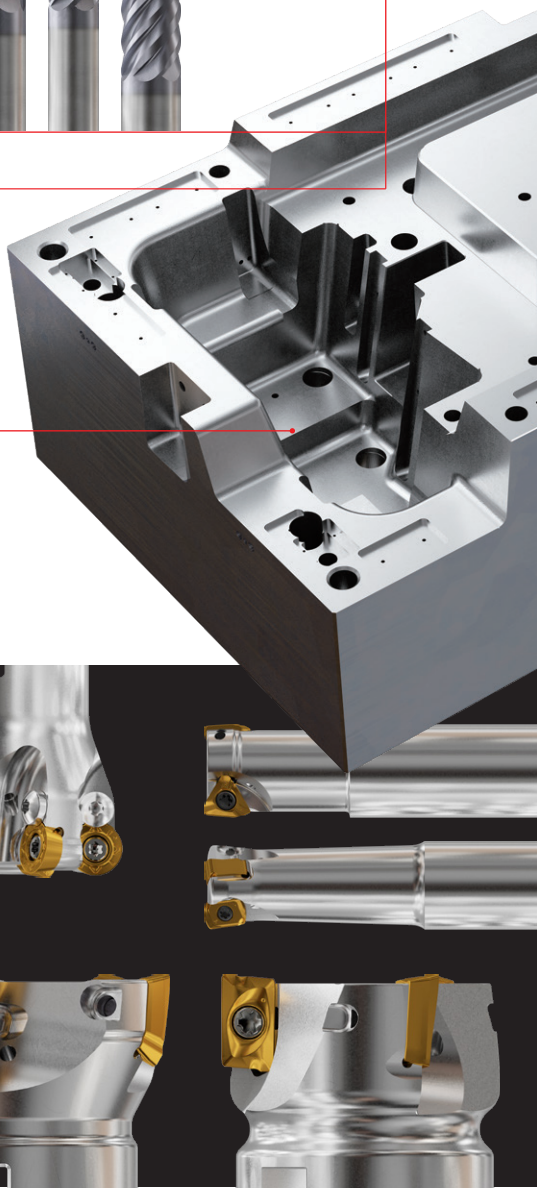

SHOULDERING / HIGH FEED MILLING

YG HF4 MILL, YG SM3 MILL & YG MILL

YG SM3 Mill & HF4 Mill are products suitable for small-sized milling and multi-purpose high-feed processing, YG Mill covers in general machining, these tools are invaluable in Die & Mold machining.



* We can provide our full line; milling, holemaking and threading for every Die & Mold application

· Phone : +82-32-526-0909, www.yg1.solutions, E-mail : yg1@yg1.solutions

MILLING / SEMI FINISHING / PROFILING

X-POWER PRO

Solid Carbide End Mill line with 4 and 6 flutes, with square, ball nose and corner radius.
The 6 flute type is suitable for fine side finishing and trochoidal milling as well.



DRILLING

X-DRILL

The X-Drill can use both as center and periphery for best-in-class cost-efficiency.
In addition, the drill insert is designed with our proprietary technology and the twisted coolant channels to achieve optimal chip evacuation, providing a highly stable process and precise machining dimensions.



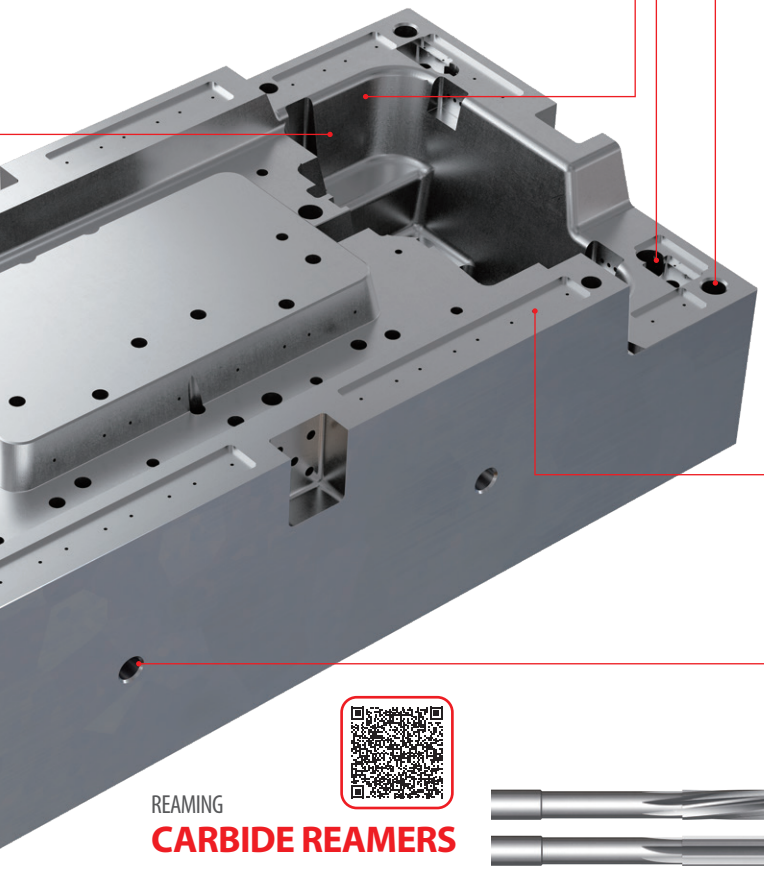

DRILLING

i-ONE DRILLS (3xD, 5xD, 8xD)

For drilling various hole sizes, i-ONE drills provide excellent performance with cost-effective exchangeable inserts.
Thanks to H-coated inserts and premium tool steel holders, a good quality of holes and increased productivity can be achieved.

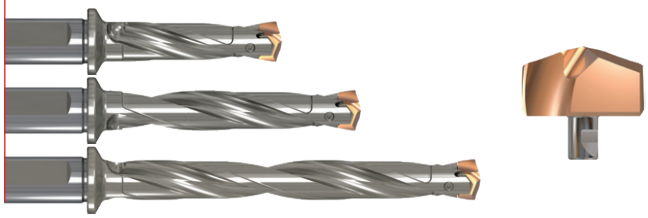

DRILLING

DREAM DRILLS PRO (3xD, 5xD)

PROVIDING HIGH PERFORMANCE
with FASTER CUTTING SPEED (HRc30 TO HRc50)

Extremely high hardness and heat resistance due to YG-1 special Z-Coating technology for Carbon Steels, Alloy Steels (HB225-325), Pre-hardened Steels (HRc30~50), Cast Iron.

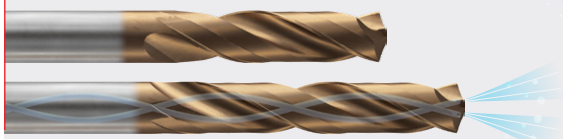



REAMING

CARBIDE REAMERS

Precision is paramount in machining top quality for Die & Mold sets. Our straight and spiral flute carbide reamers perform perfectly required hole sizes every time.

DEEP DRILLING

DREAM DRILLS MQL

(10xD,15xD, 20xD, 25xD, 30xD, 35xD, 40xD)

For very deep drilling, YG-1 provides the DREAM DRILLS – MQL line of long drills.
It also can perform drilling with the MQL(Minimum Quantity Lubrication) and general coolant for reducing the generated heat and thus greatly prolong the tool life.

THREADING

THREAD MILL | PRIME TAP
SYNCHRO TAP | COMBO TAP

YG-1 offers an full range of threading solutions. Spiral Flute, Spiral Point, Straight Flute, Cold Forming Taps as well as Thread Mills are available and achieve excellent results by our innovative technology.



QR Scan QR code to see Catalogs

· Phone : +82-32-526-0909, www.yg1.solutions, E-mail : yg1@yg1.solutions

HIGH-HARDENED STEEL

High-hardened steel is used widely in the Die & Mold industry to manufacture parts such as Jet Turbine Blades, as represented by the picture on this page. High-hardened steel poses significant machining challenges, requiring the toughest of tools. YG-1 has got just the solution in the form of our excellent X1-EH, X5070, YG HF4 Mill(-TR Chip Breaker), i-Xmill families for milling, and Dream Drills - High Hardened steel line for holemaking.

MILLING / FINISHING / PROFILING

X1-EH

X1-EH is a C-coated Nano Grain Solid Carbide End Mill.
Achieving Next Level Performance in high hard materials over 50 HRc.
This exceptionally high accuracy product makes it the ideal choice for precision milling.

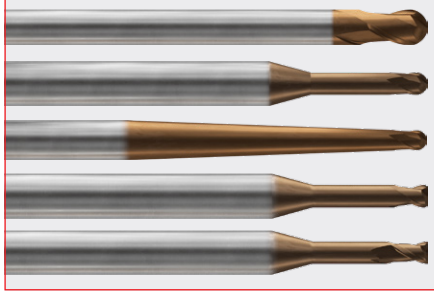

MILLING / HIGH FEED / PROFILING

X5070

X5070 is an excellent product that made a name for itself in the market.
Featuring our "Blue Coating", it is specifically made to cover the HRc50-70 ranges of High - hardened steels.
Featuring a variety of geometries, flute count and sizes, it is a perfect solution for a multitude of machining applications.



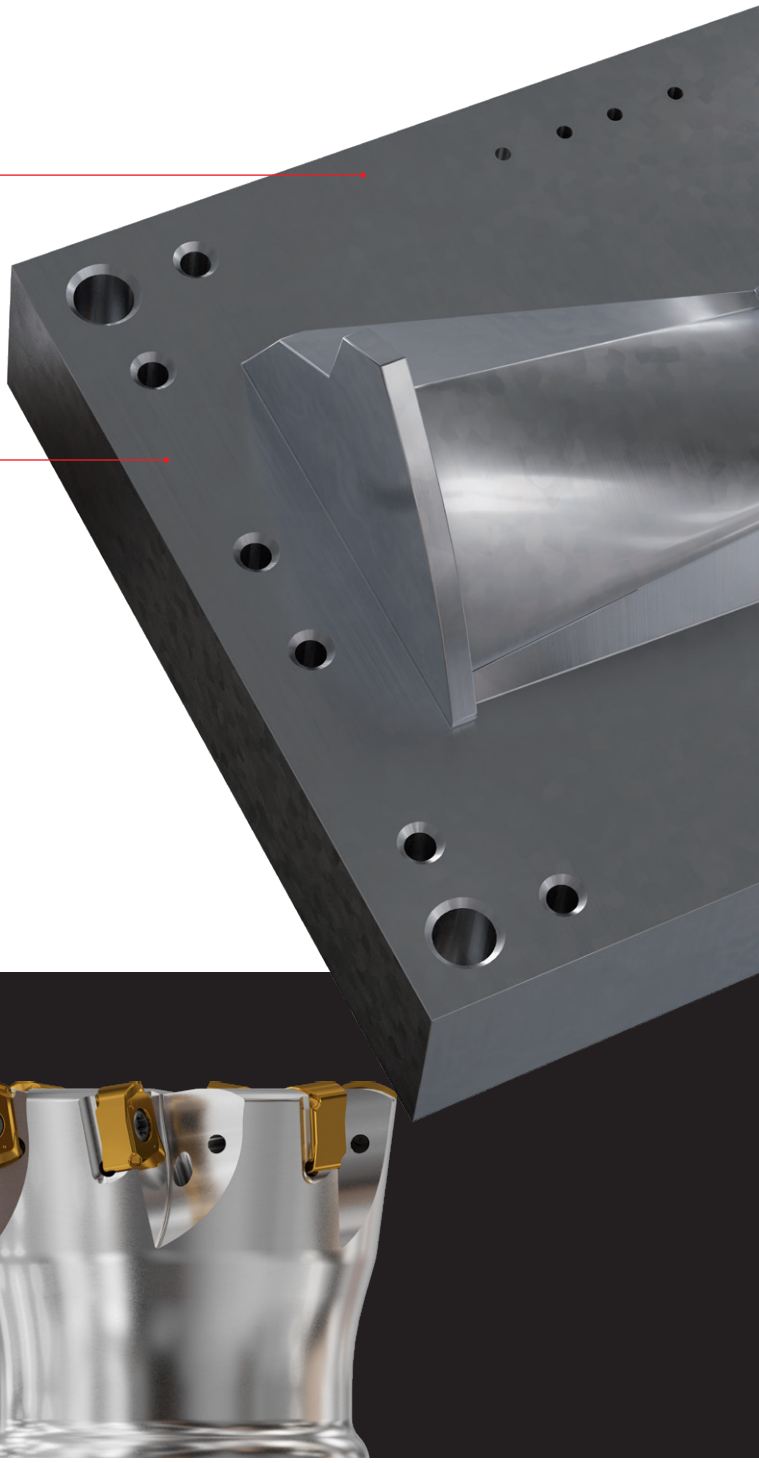

FACING / HIGH FEED MILLING

YG HF4 MILL [-TR Chip Breaker]

High Feed Inserts for Hardened Steel

YG HF4 MILL is our premium Indexable high Feed milling tools with thick thickness and reinforced edge , utilizing the tough -TR chip breaker geometry our Indexable tools are the perfect choice.

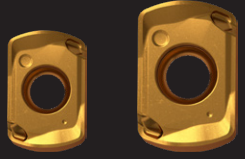

* We can provide our full line; milling, holemaking and threading for every Die & Mold application

· Phone : +82-32-526-0909, www.yg1.solutions, E-mail : yg1@yg1.solutions

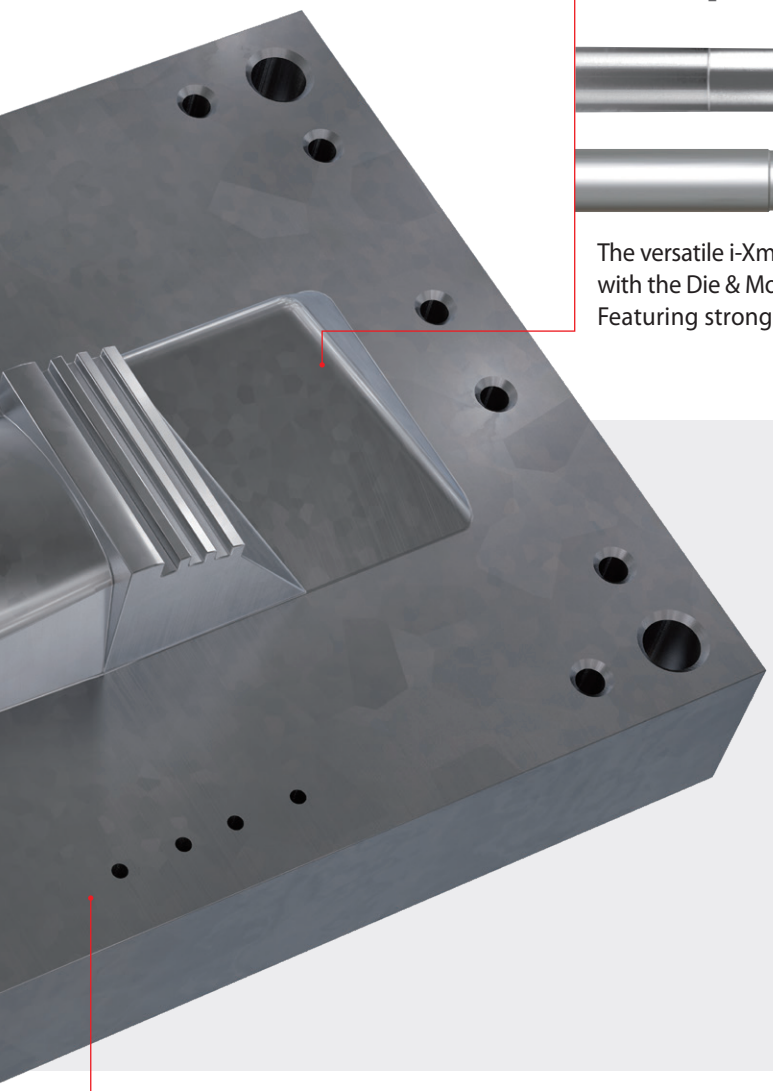

COPY MILLING / PROFILING

i-Xmill [for HIGH HARDENED STEELS]

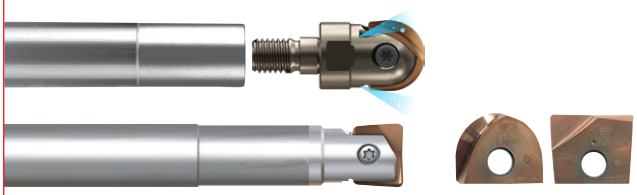

The versatile i-Xmill line, which is specifically developed
with the Die & Mold industry in mind is once again up to the challenge.
Featuring strong carbide inserts that can easily machine hardened steels.

THREADING

YG TAP HARDENED THREAD MILL



Carbide Straight Flute Taps and Thread Mills are available
and achieve excellent results by our innovative technology.
YG-1 provides a solution to any threading tasks in machining
Die & Mold sets.

DRILLING

DREAM DRILLS for HIGH HARDENED STEEL



Drilling High Hardened Steel is a significant challenge due to the tremendous forces, very few drills can withstand it.
"DREAM DRILLS for HIGH HARDENED STEEL" features special geometry design
for drilling the high hardened steels with minimum of cutting load through a special thinning.
Drilling for High Hardened Steels, Quenched Steels, Tempered Steels (Under HRc 70)
Performing good chip removal and powerful drilling.

QR Scan QR code to see Catalogs

· Phone : +82-32-526-0909, www.yg1.solutions, E-mail : yg1@yg1.solutions

STAINLESS STEEL

The molds are becoming more and more complete production systems and, at the same time, complexes that imply different characteristics in their components, among which is corrosion resistance (for example for hot runner and manifolds).
Hence the use of stainless steel. Thanks to the characteristics of its products, YG-1 is able to support Die & Mold customers for the processing of these specific materials also.

DRILLING

DREAM DRILLS INOX (3xD, 5xD, 8xD)

DREAM DRILLS INOX has the special flute shape and geometry for suitable machining of stainless steels.
It can provide excellent chip evacuation due to better surface treatment and point R-thinning makes superior centering and chip curling.
It achieves a better surface finish and a longer tool life.

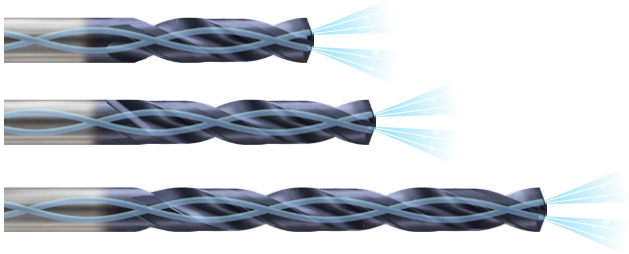

DRILLING

YG DRILL [-ST Chip Breaker]

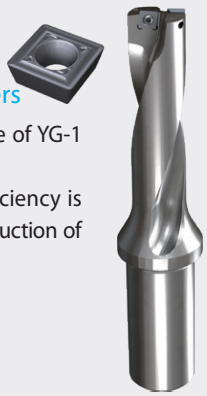

Square insert with sharp ST Chip Breakers

Covering as much materials as possible is one of YG-1 goals in the field of indexable drills.
Now larger diameters and improved cost-efficiency is made it's way to stainless steels, with the introduction of the -ST chip breaker.

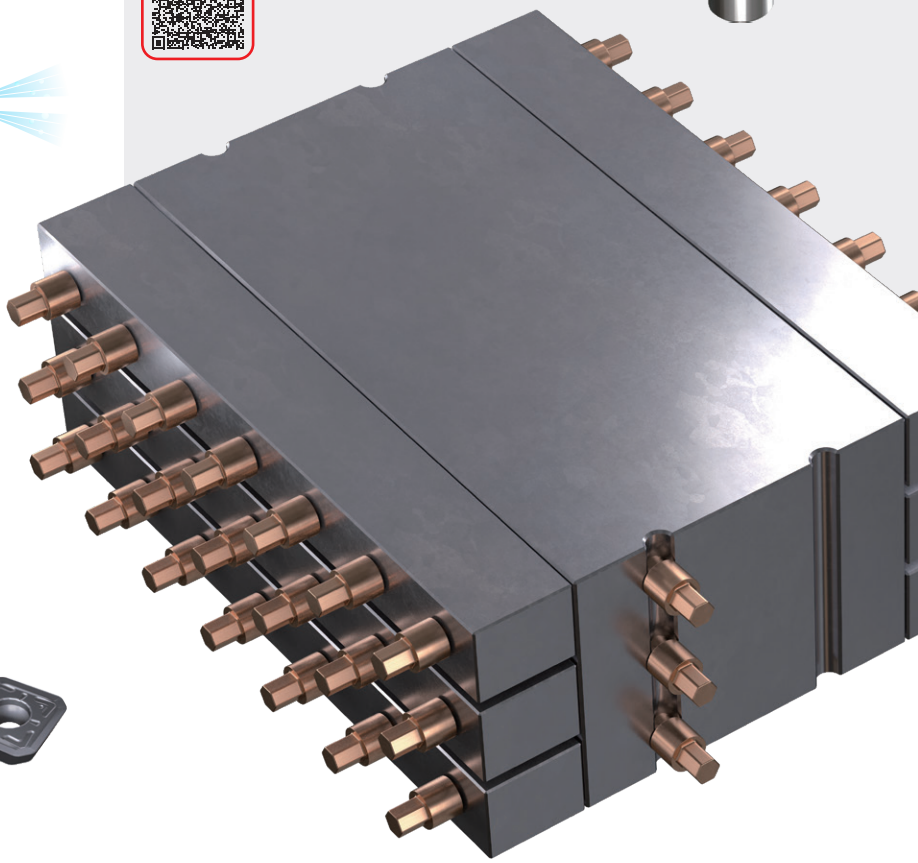

SHOULDERING / FACING / PROFILING

YG MILL [-ST Chip Breaker]



90°, High Feed and Round Inserts

YG Mill line is our line of premium indexable milling tools.
With 90 , 45 degrees, high feed milling and round inserts, featuring the positive -ST chip breaker for stainless steel, shell and shank cutters, these tools are invaluable for Die & Mold machining.

* We can provide our full line; milling, holemaking and threading for every Die & Mold application

· Phone : +82-32-526-0909, www.yg1.solutions, E-mail : yg1@yg1.solutions

COPY MILLING / PROFILING

i-Xmill [for STAINLESS STEELS]

The versatile i-Xmill line, which is specifically developed with the Die & Mold industry in mind is once again up to the challenge. Stainless steel applications covered as well.

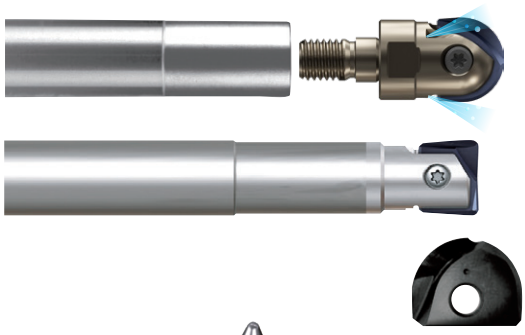

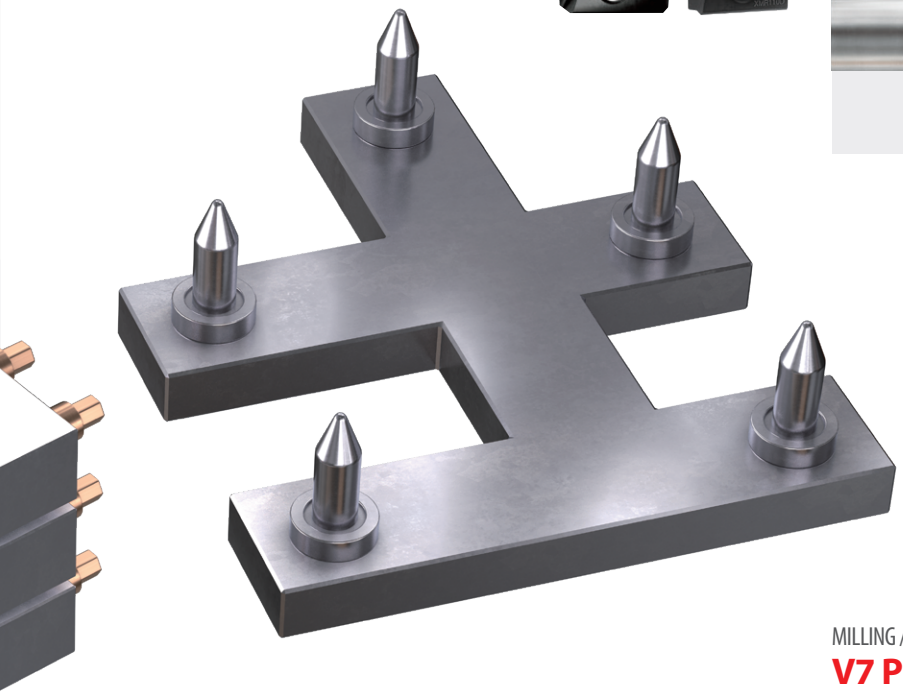

MILLING

TITANOX-POWER

Solid carbide End Mill line for Titanium, Stainless Steels, and difficult to cut materials.
Available with 4 flute double core technology, 5 flute and rougher profile for both full slotting and side high performance milling.



TITANOX-POWER HPC

New 5 Flute Design For Heavy Cutting



YG-1's High Performance Core Design

THREADING

PRIME TAP
YG TAP INOX
SYNCHRO TAP COLD FORMING

YG-1 offers an full range of threading solutions. Spiral Flute, Spiral Point, Cold Forming Taps as well as Thread Mills are available and achieve excellent results by our innovative technology.



MILLING / HEAVY CUTTING / SEMI FINISHING / PROFILING

V7 PLUS

Solid Carbide End Mill line for a wide range of materials.
Available in 4 and 6 flutes, with chamfer, ball nose, and corner radius.
The 6 flute, available with Chip Splitters, is suitable for fine finishing and trochoidal milling as well.



QR Scan QR code to see Catalogs

· Phone : +82-32-526-0909, www.yg1.solutions, E-mail : yg1@yg1.solutions

GRAPHITE

In the Die & Mold industry, the production of graphite electrodes is a fundamentally important component alongside copper electrodes. Electrodes make possible what cannot be produced directly on the die set using cutting tools.
Even intricate 3D contours can be produced precisely in the µm range with the right tools.
Wear-resistant diamond coatings are required to shape the abrasive graphite with lasting precision.

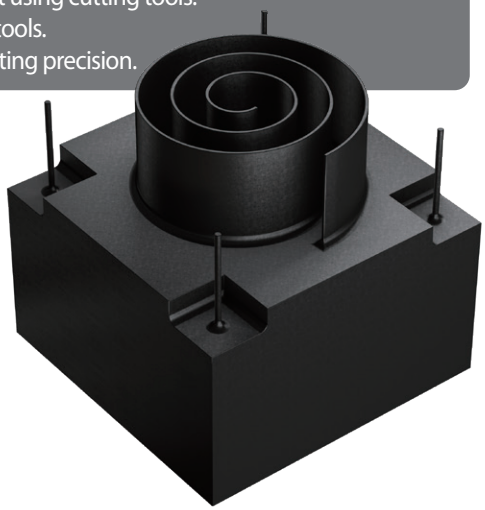

MILLING

D-POWER GRAPHITE

Solid Carbide End Mill line, specifically designed for graphite machining. The geometry and diamond coating result in fine milling and long tool life. Range of diameters from 0.2 mm.



COPPER

In addition to graphite, copper electrodes also play a leading role. Although there is no annoying graphite dust, the tendency of copper to stick poses a challenge for the tools.
Only the sharpest cutting edges or chemically inert coatings such as DLC (Diamond Like Carbon) can prevent built-up edges and the resulting inaccuracies.

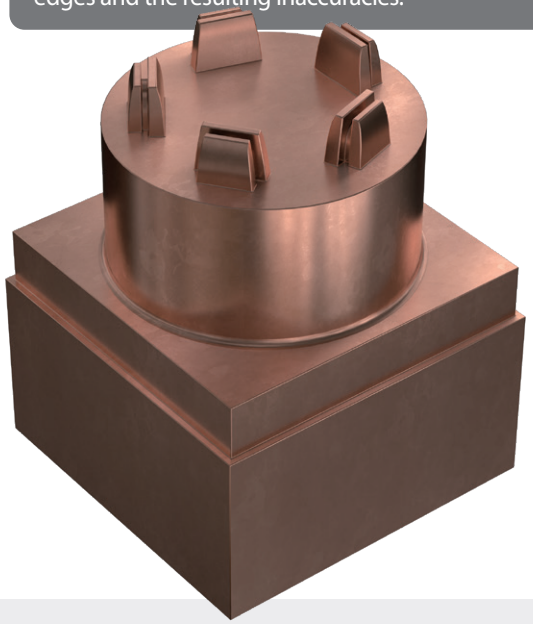

MILLING

CRX-S

Solid Carbide End Mill line, specifically designed for Copper machining.
The geometry and DLC coating result in fine milling and long tool life. Range of diameters from 0.5 mm.



THREADING

THREAD MILL | PRIME TAP
SYNCHRO TAP | COMBO TAP

YG-1 offers an full range of threading solutions. Spiral Flute, Spiral Point, Straight Flute, Cold Forming Taps as well as Thread Mills are available and achieve excellent results by our innovative technology.



HIGH PRECISION / MILLING / PROFILING / FINISHING

ALU-POWER

Suitable for nonferrous workpiece materials including aluminum and aluminum alloys.
Improved workpiece surface finishes and reduced tool wear due to mirror grind of cutting edges.



* We can provide our full line; milling, holemaking and threading for every Die & Mold application

· Phone : +82-32-526-0909, www.yg1.solutions, E-mail : yg1@yg1.solutions

ALUMINUM

Aluminum alloys are frequently found in the production of prototype molds, low production molds, and some accessory parts. The characteristics of these alloys require specific attention be given to proper preparation of the cutting tool in order to prevent sticking of the material and allow adequately high cutting speeds.
YG-1 is able to provide high-performance tools with the proper geometry and tool coatings to machine the specific aluminum alloys used in Dies & Molds.



HIGH PRECISION / MILLING / PROFILING / FINISHING

ALU-POWER

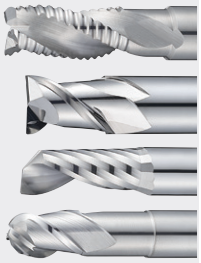

Suitable for nonferrous workpiece materials including aluminum and aluminum alloys. Improved workpiece surface finishes and reduced tool wear due to mirror grind of cutting edges.

HIGH PRODUCTIVITY / MILLING / PROFILING / FINISHING

ALU-POWER HPC

Solid Carbide End Mill line, specifically designed to cut aluminum alloy. Excellent for preparing prototype Die & Mold sets. Suitable for a variety of applications-side cutting, slotting, ramping etc. Comes in a variety of geometries-square, corner radius and ball type are available.

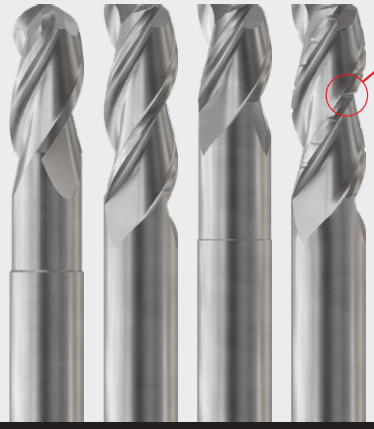

Optimized Chip Breaker Profile Design



* Available in Non-coated & DLC coated items

DRILLING

DREAM DRILLS ALU (3xD, 5xD, 8xD)

Good chip evacuation due to flute geometry & chip space. Better finish & built-up edge prevention. Suitable for fast, efficient drilling in aluminum and aluminum alloys. Optimized thinning for aluminum and aluminum alloys to prevent any clogging caused by chip welding.

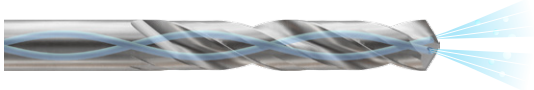

REAMING

CARBIDE REAMERS

Precision is paramount in machining top quality Die & Mold sets. Our straight and spiral flute carbide reamers perform perfectly every time.



FACING / SHOULDERING

YG MILL & YG SM3 Mill [-AL Chip Breaker]

YG Mill line of indexable tools is truely versatile. YG-1 provides an excellent solution even for cutting aluminum. Experience the increase in productivity that our inserts with -AL Chip Breaker and YG50 grades.

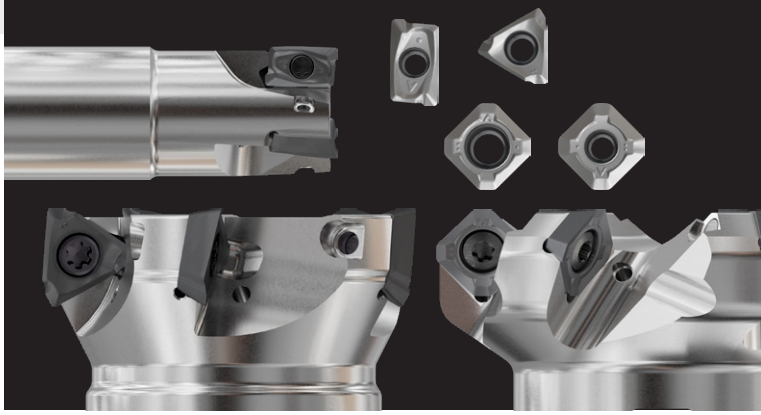

THREADING

THREAD MILL | PRIME TAP SYNCHRO TAP | COMBO TAP

YG-1 offers an full range of threading solutions. Spiral Flute, Spiral Point, Straight Flute, Cold Forming Taps as well as Thread Mills are available and achieve excellent results by our innovative technology.



QR Scan QR code to see Catalogs

· Phone : +82-32-526-0909, www.yg1.solutions, E-mail : yg1@yg1.solutions

INDUSTRY SOLUTIONS BROCHURES

YG-1 has many more industry solutions for you!
Automotive, Aerospace, Composite Materials, Die & Mold, and many more to come.
Whichever industry area you're coming from, YG-1 has the solution for you
Check what we have for you at the following web link:











· Phone : +82-32-526-0909, www.yg1.solutions, E-mail : yg1@yg1.solutions

HIGH QUALITY PRODUCTS and ON TIME DELIVERY for WORLD-WIDE CUSTOMERS

Since 1982, YG-1 has been committed to quality, innovation and the unique customer experience.
Our performance and experience have granted YG-1 the global impression of one of the leading manufacturers of high quality cutting tool solutions. This global footprint expands over 75 countries, with international logistic centers, pledging to our customers to give the best service available today - and tomorrow.

EUROPE

BELGIUM, FINLAND, ITALY, PORTUGAL, SLOVENIA, THE NETHERLANDS
CROATIA, FRANCE, LITHUANIA, ROMANIA, SPAIN, TÜRKIYE
CZECH REPUBLIC, GERMANY, NORWAY, SWEDEN, UNITED KINGDOM, DENMARK
HUNGARY, POLAND, SERBIA, SWITZERLAND, AUSTRIA, GREECE
ALBANIA, BOSNIA AND HERZEGOVINA, UKRAINE, UZBEKISTAN, BULGARIA
ESTONIA

ASIA PACIFIC

AUSTRALIA, INDONESIA, MALAYSIA, SOUTH KOREA, VIETNAM
CHINA, ISRAEL, PAKISTAN, TAIWAN
HONG KONG, JAPAN, PHILIPPINES, THAILAND
INDIA, SAUDI ARABIA, SINGAPORE, UNITED ARAB EMIRATES

AMERICAS

BRAZIL, CANADA, COLOMBIA, MEXICO, UNITED STATES

AFRICA

EGYPT, SOUTH AFRICA

YG-1 CO., LTD.

HEAD OFFICE
13-40, Songdogwahak-ro 16beon-gil, Yeonsu-gu, Incheon 21984, South Korea
Phone: +82-32-526-0909 https://www.yg1.solutions E-mail: yg1@yg1.solutions

YG-1 CO., LTD.

HEAD OFFICE

13-40, Songdogwahak-ro 16beon-gil, Yeonsu-gu,
Incheon 21984, South Korea

Phone: +82-32-526-0909

https://www.yg1.solutions E-mail: yg1@yg1.solutions

Note The information is provided for reference only.
Tool specifications are subject to change without prior notice.
Although we endeavor to supply accurate and timely information,
there can be no guarantee to cover every particular application.
YG-1 or publishers are not liable for any damage for use of the information.

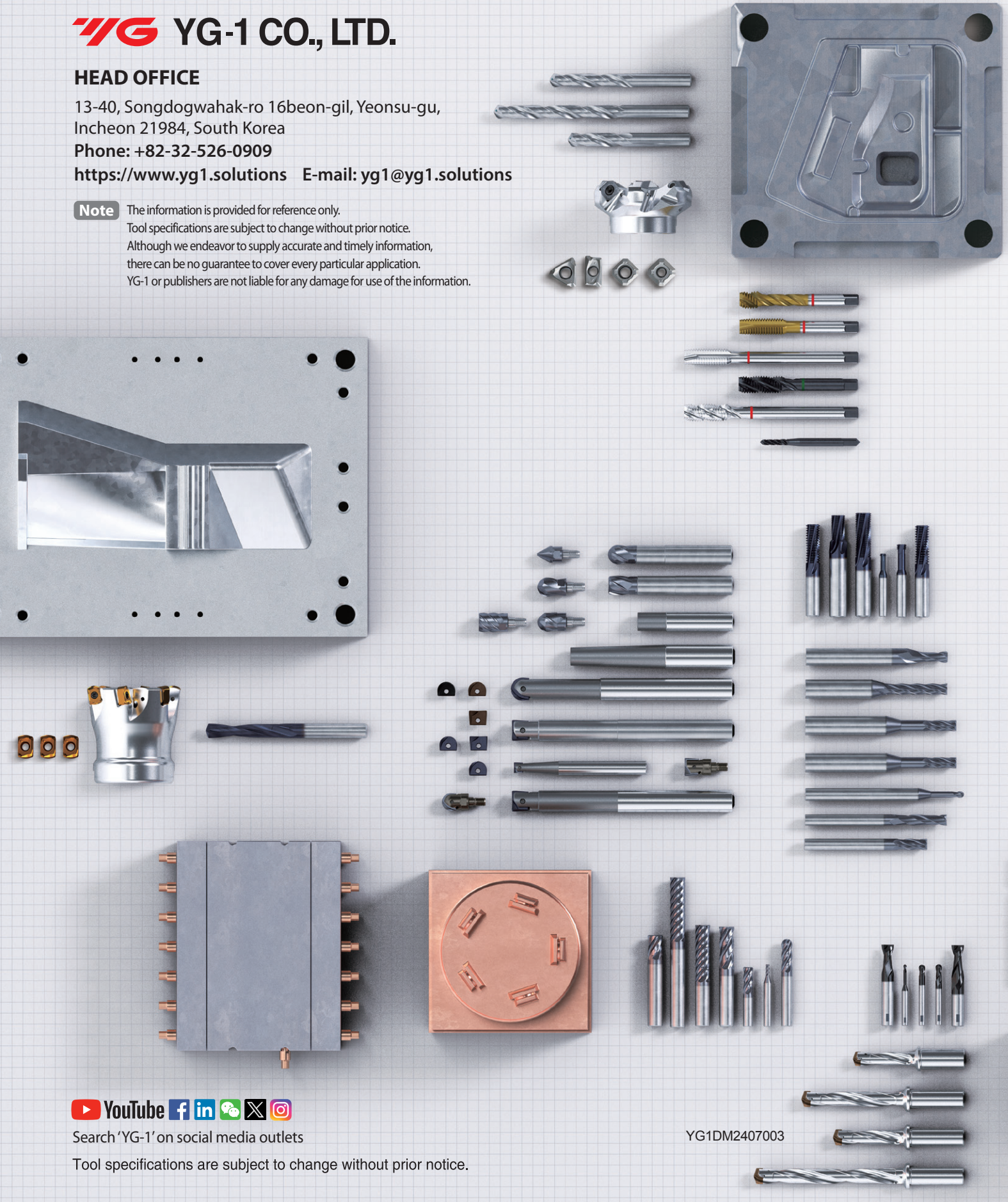

YouTube

Search 'YG-1' on social media outlets

Tool specifications are subject to change without prior notice.

YG1DM2407003